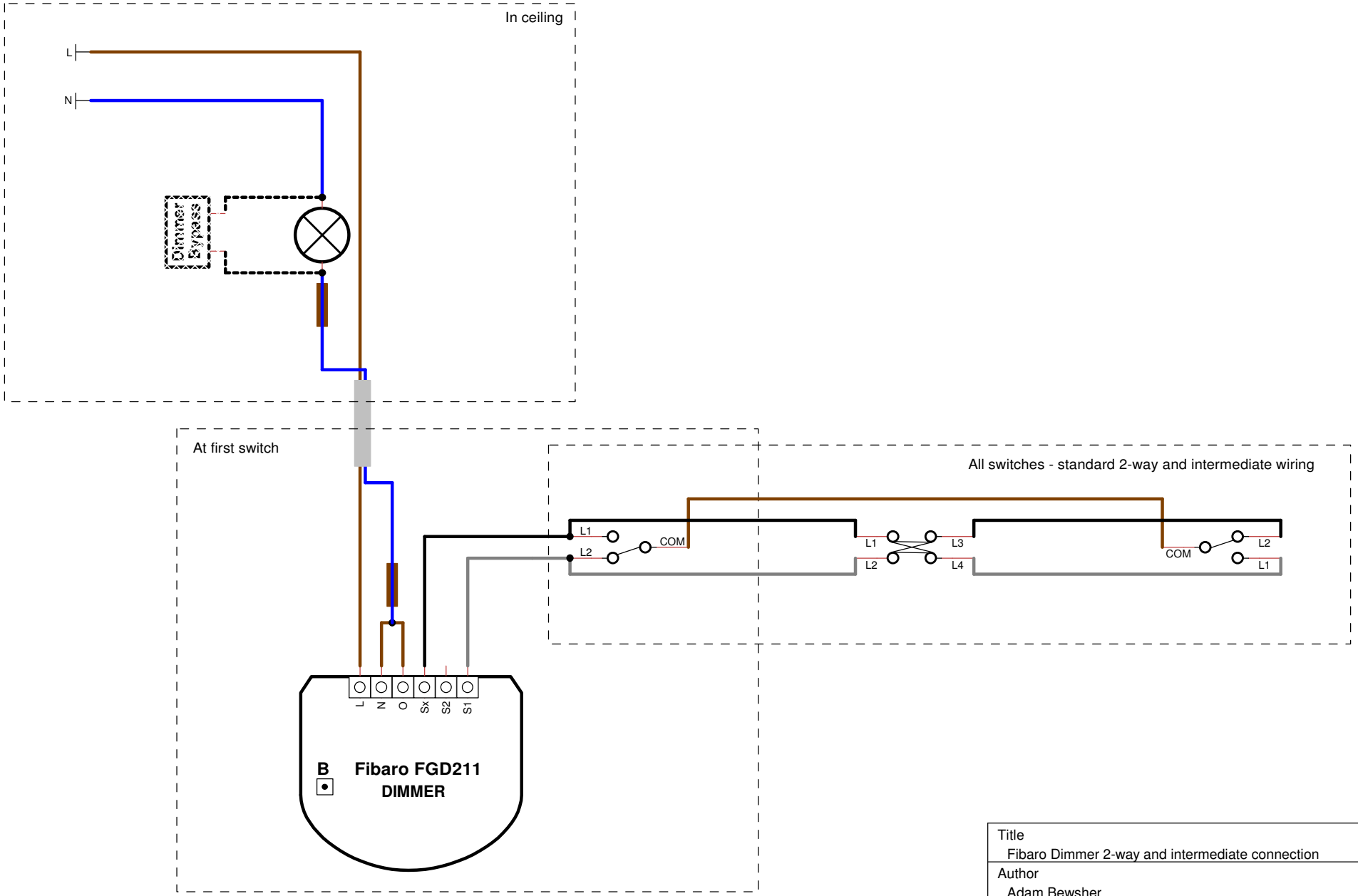

Title Fibaro Dimmer 2-way and intermediate connection		
Author Adam Bewsher Fibaro UK		
File JoNeutral 2-way and intermediate Connection.dsn		Document
Revision 1.0	Date 5/8/2014	Sheets 1 of 1